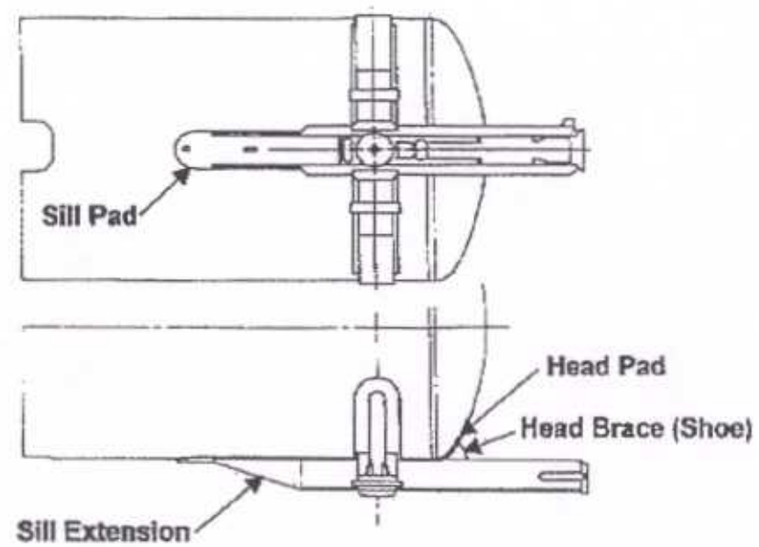Stub Sill Side/Bottom Views