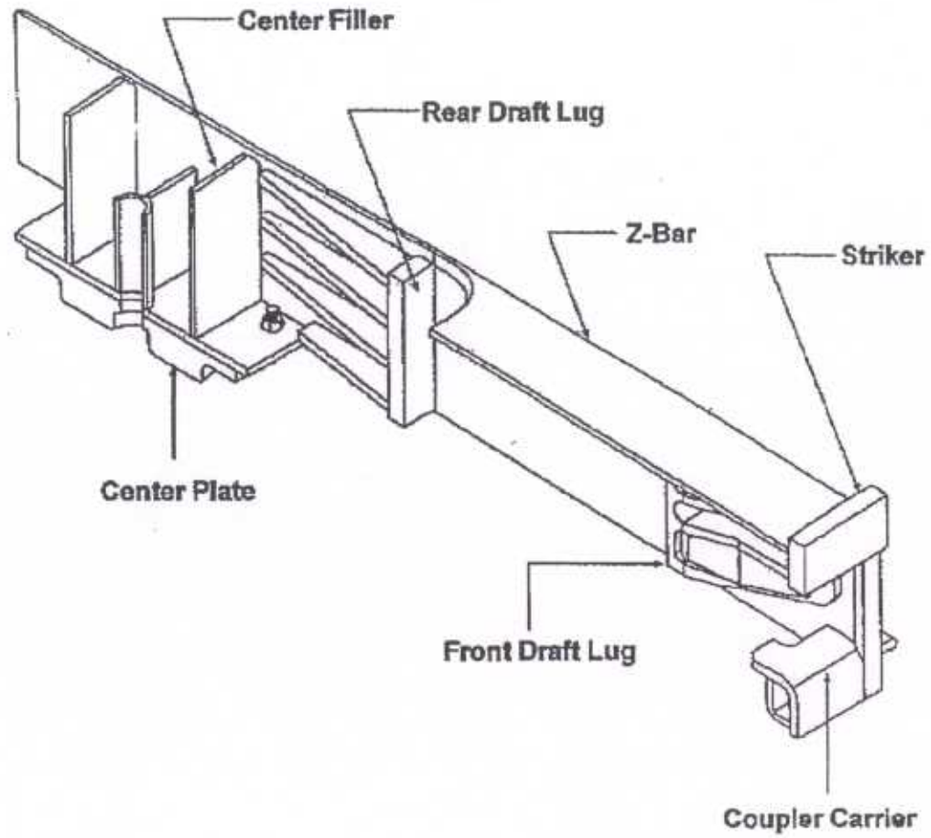Stub Sill Details